Data Sheet | Item Number: 750-891

Controller Modbus TCP; 4th generation; 2 x ETHERNET

https://www.wago.com/750-891

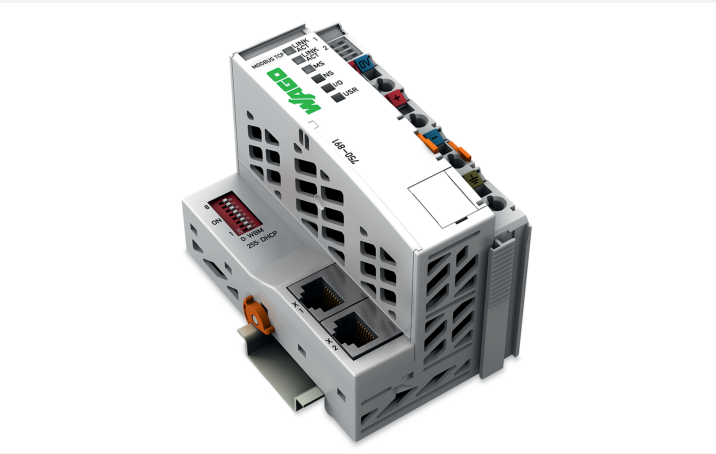

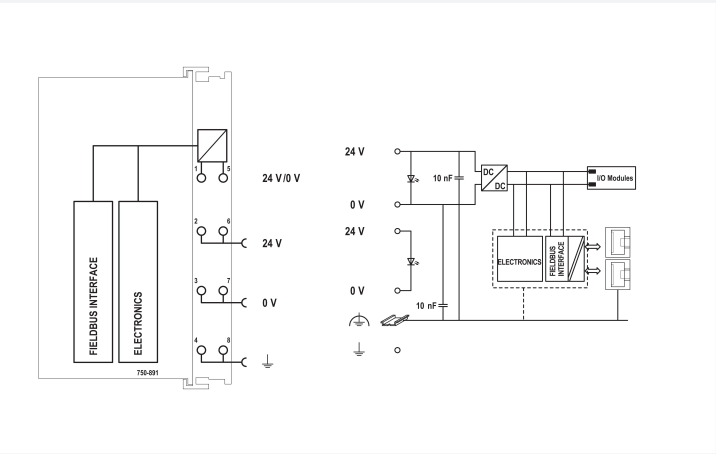

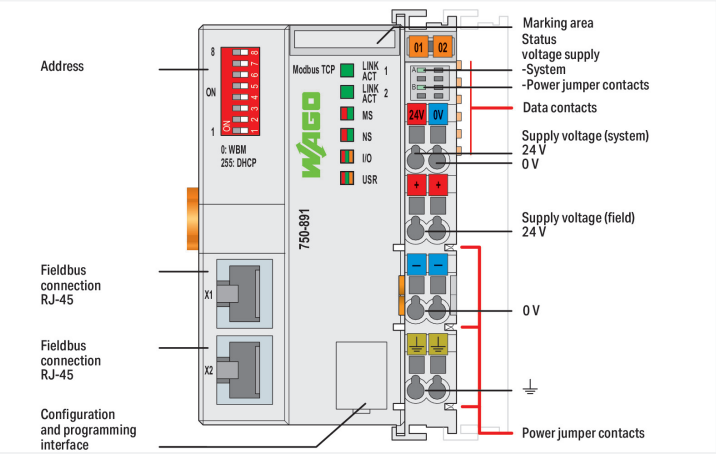

The Modbus TCP Controller can be used as a programmable controller within ETHERNET networks in conjunction with the WAGO I/O System.

The controller detects all connected I/O modules and creates a local process image. This process image may include a mixed arrangement of analog (word-by-word data transfer) and digital (bit-by-bit data transfer) modules.
Two ETHERNET interfaces and an integrated switch allow the fieldbus to be wired in a line topology, eliminating the need for additional network devices, such as switches or hubs. Both interfaces support autonegotiation and Auto-MDI(X).
The DIP switch configures the last byte of the IP address and may be used for IP address assignment.The controller is designed for fieldbus communication in Modbus® networks. It also supports a wide variety of standard ETHERNET protocols (e.g., HTTP(S), BootP, DHCP, DNS, SNTP, (S)FTP, SNMP).

An integrated Webserver provides user configuration options, while displaying the controller's status information.
The IEC 61131-3 programmable controller is multitasking-capable and features a capacitor-backed RTC.

Technical data	
Communications	Modbus (TCP, UDP)
ETHERNET protocols	HTTP(S) BootP DHCP DNS SNTP FTP(S) SNMP
Visualization	Web-Visu
CPU	32 bits

Continued on next page

Technical data

Programming languages per IEC 61131-3	Instruction List (IL) Ladder Diagram (LD) Function Block Diagram (FBD) Continuous Function Chart (CFC) Structured Text (ST) Sequential Function Chart (SFC)
Programming environment	WAGO-I/O-*PRO* V2.3 (based on CODESYS V2.3)
Configuration options	WAGO-I/O-*CHECK* Web-Based Management CODESYS Library
Transmission rate	10/100 Mbit/s
Transmission medium (communication/fieldbus)	Twisted pair S-UTP; 100 Ω; Cat. 5; 100 m maximum cable length
Transmission performance	Class D per EN 50173
Program memory	4 MB
Data memory	4 MB
Non-volatile software memory	32 KB
Number of modules per node (max.)	250
Number of modules without a bus extension (max.)	64
Input and output process image (fieldbus) max.	1020 words/1020 words
Powerfail RTC buffer	6 days (min.)
Indicators	LED (LINK/ACT) green: Network connection via ports 1 ... 2; LED (MS, NS) red/green: Status of node, network; LED (I/O, USR) red/green/orange: Local data bus status, status programmable by user; LED (A, B) green: System power supply status, field supply
Supply voltage (system)	24 VDC (-25 ... +30 %); via pluggable connector (CAGE CLAMP® connection)
Input current (typ.) at nominal load (24 V)	500 mA
Power supply efficiency (typ.) at nominal load (24 V)	90 %
Current consumption (system supply)	390 mA
Total current (system supply)	1700 mA
Supply voltage (field)	24 VDC (-25 ... +30 %); via power jumper contacts
Current carrying capacity (power jumper contacts)	10 A
Number of outgoing power jumper contacts	3
Isolation	500 V system/field

Connection Data

Connection technology: communication/fieldbus	Modbus (TCP, UDP): 2 x RJ-45
Connection technology: system supply	2 x CAGE CLAMP®
Connection technology: field supply	6 x CAGE CLAMP®
Connectable conductor materials	Copper
Connection type	System/field supply
Solid conductor	0.08 ... 2.5 mm² / 28 ... 14 AWG
Fine-stranded conductor	0.08 ... 2.5 mm² / 28 ... 14 AWG
Strip length	8 ... 9 mm / 0.31 ... 0.35 inches
Connection technology: device configuration	1 x Male connector; 4-pole

Physical data

Width	61.5 mm / 2.421 inches
Height	100 mm / 3.937 inches
Depth	71.9 mm / 2.831 inches
Depth from upper-edge of DIN-rail	64.7 mm / 2.547 inches

 Continued on next page

Mechanical data

Mounting type	DIN-35 rail

Material data

Housing material	Polycarbonate; polyamide 6.6
Fire load	2.212 MJ
Weight	149.9 g
Conformity marking	CE

Environmental requirements

Ambient temperature (operation)	0 … +55 °C
Ambient temperature (storage)	-25 … +85 °C
Protection type	IP20
Pollution degree	2 per IEC 61131-2
Operating altitude	without temperature derating: 0 … 2000 m; with temperature derating: 2000 … 5000 m (0.5 K/100 m); 5000 m (max.)
Mounting position	Horizontal left, horizontal right, horizontal top, horizontal bottom, vertical top and vertical bottom
Relative humidity (without condensation)	95 %
Vibration resistance	4g per IEC 60068-2-6
Shock resistance	15g per IEC 60068-2-27
EMC immunity to interference	per EN 61000-6-2, marine applications
EMC emission of interference	per EN 61000-6-3, marine applications
Exposure to pollutants	per IEC 60068-2-42 and IEC 60068-2-43
Permissible H_2S contaminant concentration at a relative humidity 75 %	10 ppm
Permissible SO_2 contaminant concentration at a relative humidity 75 %	25 ppm

Data Act

Pre-contractual Information	Data-Act-750-Series-Controller

Commercial data

PU (SPU)	1 pcs
Packaging type	Box
Country of origin	DE
GTIN	4055143821513
Customs tariff number	85371091990

Product Classification

UNSPSC	32151705
eCl@ss 10.0	27-24-26-07
eCl@ss 9.0	27-24-26-07
ETIM 9.0	EC000236
ETIM 10.0	EC000236
ECCN	NO US CLASSIFICATION

 Continued on next page

Environmental Product Compliance

CAS-No.	1303-86-2 1317-36-8 7439-92-1 79-94-7
REACH Candidate List Substance	2,2',6,6'-tetrabromo-4,4'-isopropylidenediphenol Diboron trioxide Lead Lead monoxide
RoHS Compliance Status	Compliant,With Exemption
RoHS Exemption	6(c) 7(a) 7(c)-I 7(c)-II
SCIP notification number (Austria)	c5b3e813-eb0b-445b-af50-f19b04fe5f4b
SCIP notification number (Belgium)	c97e0334-35ae-406e-8fd0-a27da4fa2e06
SCIP notification number (Bulgaria)	436d76be-0d80-4b9c-9516-9dfb46c83823
SCIP notification number (Czech Republic)	e8bba3ac-3c64-4688-9cc5-c2bf313a7753
SCIP notification number (Denmark)	3e87f316-4cf1-4039-84cc-2538a51b0f38
SCIP notification number (Finland)	ab4133a3-4233-4a76-95f8-2f4cff85e2c5
SCIP notification number (France)	d4dbae29-1a33-411b-a1ec-10983250c027
SCIP notification number (Germany)	a842d43c-957c-48ac-9697-7383445dd428
SCIP notification number (Hungary)	497c149c-4f29-4842-a540-b6434648dcc2
SCIP notification number (Italy)	33d2d232-c3c5-41d3-b42b-12796622d10b
SCIP notification number (Netherlands)	86fbf79c-60fd-4b7f-bf1c-b30f5d7edebb
SCIP notification number (Poland)	14093575-ee9e-479f-a19b-30231d2d9472
SCIP notification number (Romania)	bdd60dbb-0206-4cd2-8188-b0575853abc8
SCIP notification number (Sweden)	c22d1014-6c24-4342-876a-6d2f9c5eac2e

Approvals / Certificates

General approvals

Approval	Standard	Certificate Name
EAC GZO Almaty Standart	TP TC 020/2011	EAC CoC 03083
KC National Radio Research Agency	Article 58-2, Clause 3	MSIP-REM-W43-PFC750
UL Underwriters Laboratories Inc. (ORDINARY LOCATIONS)	-	E175199

Declarations of conformity and manufacturer's declarations

Approval	Standard	Certificate Name
EU-Declaration of Conformity WAGO GmbH & Co. KG	-	-
UK-Declaration of Conformity WAGO GmbH & Co. KG	-	-

Approvals for marine applications

Approval	Standard	Certificate Name
ABS American Bureau of Shipping	-	25-0415412
BSH Bundesamt fuer Seeschiffahrt und Hydrographie	-	1104

Approvals for marine applications

BV Bureau Veritas S.A.	Rules for class. of Steel Ships	66711/A0
DNV DNV GL SE	DNV-CG-0339,Aug.2021	TAA0000194
KR Korean Register of Shipping	-	KR HMB05880-AC001
LR Lloyds Register EMEA	-	LR22180952TA
PRS Polski Rejestr Statków	-	TE/1101/880590/23
RINA RINA Germany GmbH	-	ELE343521XG001

 Continued on next page

Approvals for hazardous areas

Approval	Standard	Certificate Name
ATEX TUEV Nord Cert GmbH	EN 60079-0	TUEV14ATEX148929X (II 3 G Ex ec IIC T4 Gc)
IECEx TUEV Nord Cert GmbH	IEC 60079-0	IECEx TUN 14.0035 X (Ex ec IIC T4 Gc)
INMETRO TÜV Rheinland do Brasil Ltda.	IEC 60079-0	TÜV 12.1297 X
UKEx WAGO GmbH & Co. KG	EN 60079-0	UKCA_WA GO22UKEX003X_ec
UL Underwriters Laboratories Inc. (HAZARDOUS LOCATIONS)	UL 121201	E198726

Downloads

Environmental Product Compliance

Compliance Search

Environmental Product Compliance 750-891

Documentation

Manual

Product Manual Controller Modbus TCP; G4; 2ETH	V 1.1.1 25.05.2022	pdf 7532.08 KB	
System Manual Series 750/753			

System Description

Overview on WAGO-I/O-SYSTEM 750 approvals	pdf 770.48 KB	
750 Controller, General Product Information	pdf 507.50 KB	

Bid Text

750-891	19.11.2018	doc 32.50 KB	
750-891	19.02.2019	xml 7.98 KB	
ausschreiben.de 750-891			

Instruction Leaflet

CCC Ex (Additional information)	26.04.2023	pdf 159.76 KB	

Continued on next page

CAD/CAE-Data

CAD data	CAE data
2D/3D Models 750-891	EPLAN Data Portal 750-891
	ZUKEN Portal 750-891

Engineering-Software

Configuration and Commissioning Software

(759-316) WAGO Ethernet Settings / Serie 750	06.18.01.01 02.09.2021	zip 26678.54 KB	
WAGOupload	1.16.1.0 02.02.2022	zip 12111.45 KB	

Runtime Software

Firmware

0750-089x, Controller	V 11 24.08.2023	zip 4696.31 KB	

1 Compatible Products

1.1 Optional Accessories

1.1.1 Cables and connectors

1.1.1.1 Connector plug

Item No.: 750-979/000-011
Connector ETHERNET; RJ-45; Cat. 6A; angled; Code T568A; AWG 22; Strain relief

Item No.: 750-979/000-021
Connector ETHERNET; RJ-45; Cat. 6A; angled; Code T568A; AWG 24; Strain relief

Item No.: 750-979/000-012
Connector ETHERNET; RJ-45; Cat. 6A; angled; Code T568B; AWG 22; Strain relief

Item No.: 750-979/000-022
Connector ETHERNET; RJ-45; Cat. 6A; angled; Code T568B; AWG 24; Strain relief

Item No.: 750-977/000-011
Connector ETHERNET; RJ-45; Cat. 6A; straight; Code T568A; AWG 22

Item No.: 750-978/000-011
Connector ETHERNET; RJ-45; Cat. 6A; straight; Code T568A; AWG 22; Strain relief

Item No.: 750-977/000-021
Connector ETHERNET; RJ-45; Cat. 6A; straight; Code T568A; AWG 24

Item No.: 750-978/000-021
Connector ETHERNET; RJ-45; Cat. 6A; straight; Code T568A; AWG 24; Strain relief

Item No.: 750-977/000-012
Connector ETHERNET; RJ-45; Cat. 6A; straight; Code T568B; AWG 22

Item No.: 750-978/000-012
Connector ETHERNET; RJ-45; Cat. 6A; straight; Code T568B; AWG 22; Strain relief

Item No.: 750-977/000-022
Connector ETHERNET; RJ-45; Cat. 6A; straight; Code T568B; AWG 24

Item No.: 750-978/000-022
Connector ETHERNET; RJ-45; Cat. 6A; straight; Code T568B; AWG 24; Strain relief

Item No.: 750-975
ETHERNET RJ-45 connector, IP20; ETHERNET 10/100 Mbit/s; for field assembly

 Continued on next page

1.1.2 Communication

1.1.2.1 Communication cable

Item No.: 750-923
Configuration cable; USB connector; Length: 2.5 m

Item No.: 750-923/000-001
Configuration cable; USB connector; Length: 5 m

1.1.3 DIN-rail

1.1.3.1 Mounting accessories

Item No.: 210-196
Aluminum carrier rail; 35 x 8.2 mm; 1.6 mm thick; 2 m long; unslotted; similar to EN 60715; silver-colored

Item No.: 210-198
Copper carrier rail; 35 x 15 mm; 2.3 mm thick; 2 m long; unslotted; according to EN 60715; copper-colored

Item No.: 210-197
Steel carrier rail; 35 x 15 mm; 1.5 mm thick; 2 m long; slotted; similar to EN 60715; silver-colored

Item No.: 210-114
Steel carrier rail; 35 x 15 mm; 1.5 mm thick; 2 m long; unslotted; similar to EN 60715; silver-colored

Item No.: 210-118
Steel carrier rail; 35 x 15 mm; 2.3 mm thick; 2 m long; unslotted; according to EN 60715; silver-colored

Item No.: 210-115
Steel carrier rail; 35 x 7.5 mm; 1 mm thick; 2 m long; slotted; according to EN 60715; "Hole width 18 mm; silver-colored

Item No.: 210-112
Steel carrier rail; 35 x 7.5 mm; 1 mm thick; 2 m long; slotted; according to EN 60715; "Hole width 25 mm; silver-colored

Item No.: 210-113
Steel carrier rail; 35 x 7.5 mm; 1 mm thick; 2 m long; unslotted; according to EN 60715; silver-colored

1.1.4 Marking

1.1.4.1 Group marker carrier

Item No.: 750-106
Group marker carrier

1.1.4.2 Marker

Item No.: 750-100
Marker card; as a DIN A4 sheet; plain

Item No.: 2009-145/000-006
Mini-WSB Inline; for Smart Printer; 1700 pieces on roll; stretchable 5 - 5.2 mm; plain; snap-on type; blue

Item No.: 2009-145/000-007
Mini-WSB Inline; for Smart Printer; 1700 pieces on roll; stretchable 5 - 5.2 mm; plain; snap-on type; gray

Item No.: 2009-145/000-023
Mini-WSB Inline; for Smart Printer; 1700 pieces on roll; stretchable 5 - 5.2 mm; plain; snap-on type; green

Item No.: 2009-145/000-012
Mini-WSB Inline; for Smart Printer; 1700 pieces on roll; stretchable 5 - 5.2 mm; plain; snap-on type; orange

Item No.: 2009-145/000-005
Mini-WSB Inline; for Smart Printer; 1700 pieces on roll; stretchable 5 - 5.2 mm; plain; snap-on type; red

Item No.: 2009-145/000-024
Mini-WSB Inline; for Smart Printer; 1700 pieces on roll; stretchable 5 - 5.2 mm; plain; snap-on type; violet

Item No.: 2009-145
Mini-WSB Inline; for Smart Printer; 1700 pieces on roll; stretchable 5 - 5.2 mm; plain; snap-on type; white

Item No.: 2009-145/000-002
Mini-WSB Inline; for Smart Printer; 1700 pieces on roll; stretchable 5 - 5.2 mm; plain; snap-on type; yellow

Item No.: 248-501/000-006
Mini-WSB marking card; as card; not stretchable; plain; snap-on type; blue

Item No.: 248-501/000-007
Mini-WSB marking card; as card; not stretchable; plain; snap-on type; gray

Item No.: 248-501/000-023
Mini-WSB marking card; as card; not stretchable; plain; snap-on type; green

Item No.: 248-501/000-017
Mini-WSB marking card; as card; not stretchable; plain; snap-on type; light green

Item No.: 248-501/000-012
Mini-WSB marking card; as card; not stretchable; plain; snap-on type; orange

Item No.: 248-501/000-005
Mini-WSB marking card; as card; not stretchable; plain; snap-on type; red

Item No.: 248-501/000-024
Mini-WSB marking card; as card; not stretchable; plain; snap-on type; violet

 Continued on next page

1.1.4.2 Marker

Item No.: 248-501
Mini-WSB marking card; as card; not stretchable; plain; snap-on type; white

Item No.: 248-501/000-002
Mini-WSB marking card; as card; not stretchable; plain; snap-on type; yellow

1.1.4.3 Marker carrier

Item No.: 750-103
Group marker carrier

1.1.5 Shield termination

1.1.5.1 Shield clamping saddles

Item No.: 790-108
Shield clamping saddle; 11 mm wide; diameter of compatible conductor; 3 ... 8 mm

Item No.: 790-208
Shield clamping saddle; 12.4 mm wide; 3 ... 8 mm

Item No.: 790-116
Shield clamping saddle; 19 mm wide; diameter of compatible conductor; 7 ... 16 mm

Item No.: 790-216
Shield clamping saddle; 21.8 mm wide; 6 ... 16 mm

Item No.: 790-124
Shield clamping saddle; 27 mm wide; diameter of compatible conductor; 6 ... 24 mm

Item No.: 790-220
Shield clamping saddle; 30 mm wide; 6 ... 20 mm

Item No.: 790-140
Shield clamping saddle; diameter of compatible conductor

1.1.7 System enclosure

1.1.7.1 System enclosure

Item No.: 850-825
IP65 enclosure; Aluminium (RAL 7032); WxHxD (160x100x160 mm); 9 x M12, 4 x M20

Item No.: 850-826
IP65 enclosure; Aluminium (RAL 7032); WxHxD (240x100x160 mm); 4 x M20, 4 x M16, 14 x M12 cable grip

Item No.: 850-827
IP65 enclosure; Aluminium (RAL 7032); WxHxD (320x100x160 mm); 4 x M20, 8 x M16, 17 x M12 cable grip

Item No.: 850-828
IP65 enclosure; Aluminium (RAL 7032); WxHxD (480x100x160 mm); 4 x M20, 10 x M16, 35 x M12 cable grip

Item No.: 850-826/002-000
IP65 enclosure; Aluminium (RAL 7035); WxHxD (240x100x160 mm); 4 x M20, 4 x M16, 14 x M12 cable grip

Item No.: 850-827/002-000
IP65 enclosure; Aluminium (RAL 7035); WxHxD (320x100x160 mm); 4 x M20, 8 x M16, 17 x M12 cable grip

Item No.: 850-828/002-000
IP65 enclosure; Aluminium (RAL 7035); WxHxD (480x100x160 mm); 4 x M20, 10 x M16, 35 x M12 cable grip

Item No.: 850-834
IP65 enclosure; Polyester (RAL 7032); WxHxD (164x100x164 mm); 9 x M12, 4 x M20

Item No.: 850-835
IP65 enclosure; Polyester (RAL 7032); WxHxD (244x100x164 mm); 4 x M20, 4 x M16, 14 x M12 cable grip

Item No.: 850-836
IP65 enclosure; Polyester (RAL 7032); WxHxD (324x100x164 mm); 4 x M20, 8 x M16, 17 x M12 cable grip

Item No.: 850-814/002-000
IP65 enclosure; Sheet steel (RAL 7035); WxHxD (200x120x200 mm); without flange plate

Item No.: 850-815/002-000
IP65 enclosure; Sheet steel (RAL 7035); WxHxD (300x120x200 mm); without flange plate

Item No.: 850-816/002-000
IP65 enclosure; Sheet steel (RAL 7035); WxHxD (400x120x200 mm); without flange plate

Item No.: 850-817/002-000
IP65 enclosure; Sheet steel (RAL 7035); WxHxD (600x120x200 mm); without flange plate